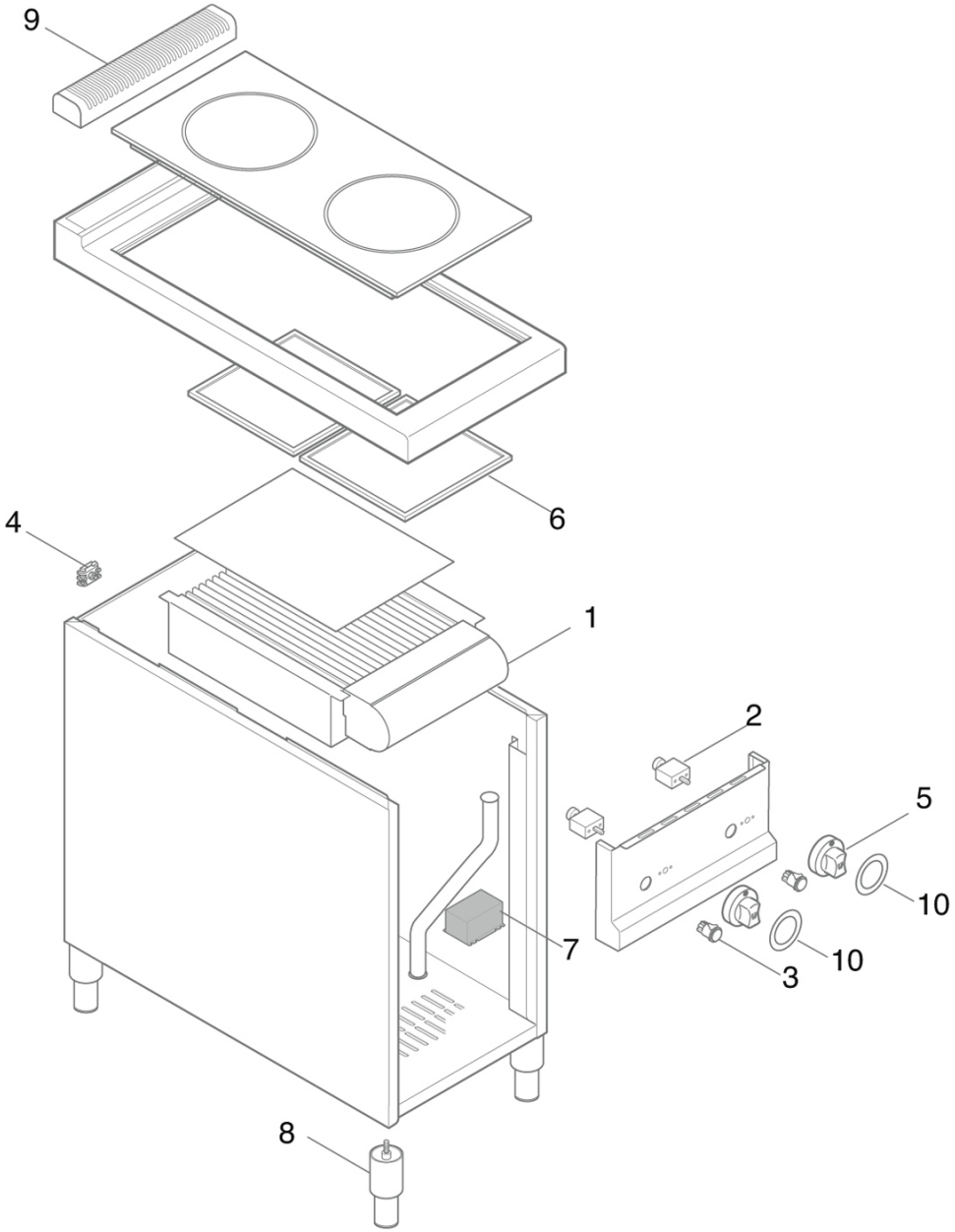
9
6
4
1
2
5
10
7
10
3
8

SE9P4M/IND

Pos. Item	Codice Code	Descrizione	Item Description	Designation articles	Artikelbeschreibung	Decripciòn artìculos	N° pezzi - No. pieces					
4	31885800	Morsetto equipotenziale	Equip.terminal	Borne Équip.	Aquipotenzial-klemmenleiste	Borne equipotencial						1
5	35877500	Man.rossa a '0°' ral3000 dista	Red knob '0°'ral3000	Manette rouge '0°'ral3000	Drehknopf '0°' ral3000	Mando rojo '0°' ral3000						4
5	35954900	Sottomanopola rossa attr. el.	Sottomanopola rossa attr. el.	Sottomanopola rossa attr. el.	Sottomanopola rossa attr. el.	Sottomanopola rossa attr. el.						4
8	24684500	Piedino inox 2 h-125/175	Foot 2 h-125/175	Pied 2 h-125/175	Stellfuss 2 h-125/175	Pata 2 h-125/175						4
9	38856900	Griglietta scarico fumi l=350	Cover grill for chimney l=350	Grille pour cheminee l=350	Entleerung rauch rost l=350	Rejilla por chimenea l=350						2
10	31952800	Serig.rossa manop.cuc.ele.vtr	Electric knob serigraphy	Serigraphie manette electr.	Drehknopfserigraphie	Serigrafia mando electr.						4